Completed document

Model: PDP794S

PNC: 94403139700

MODELS: PDP794S PDP794W

EX. VIEW DRAWING 5780
UPPER OVEN ASSEMBLY

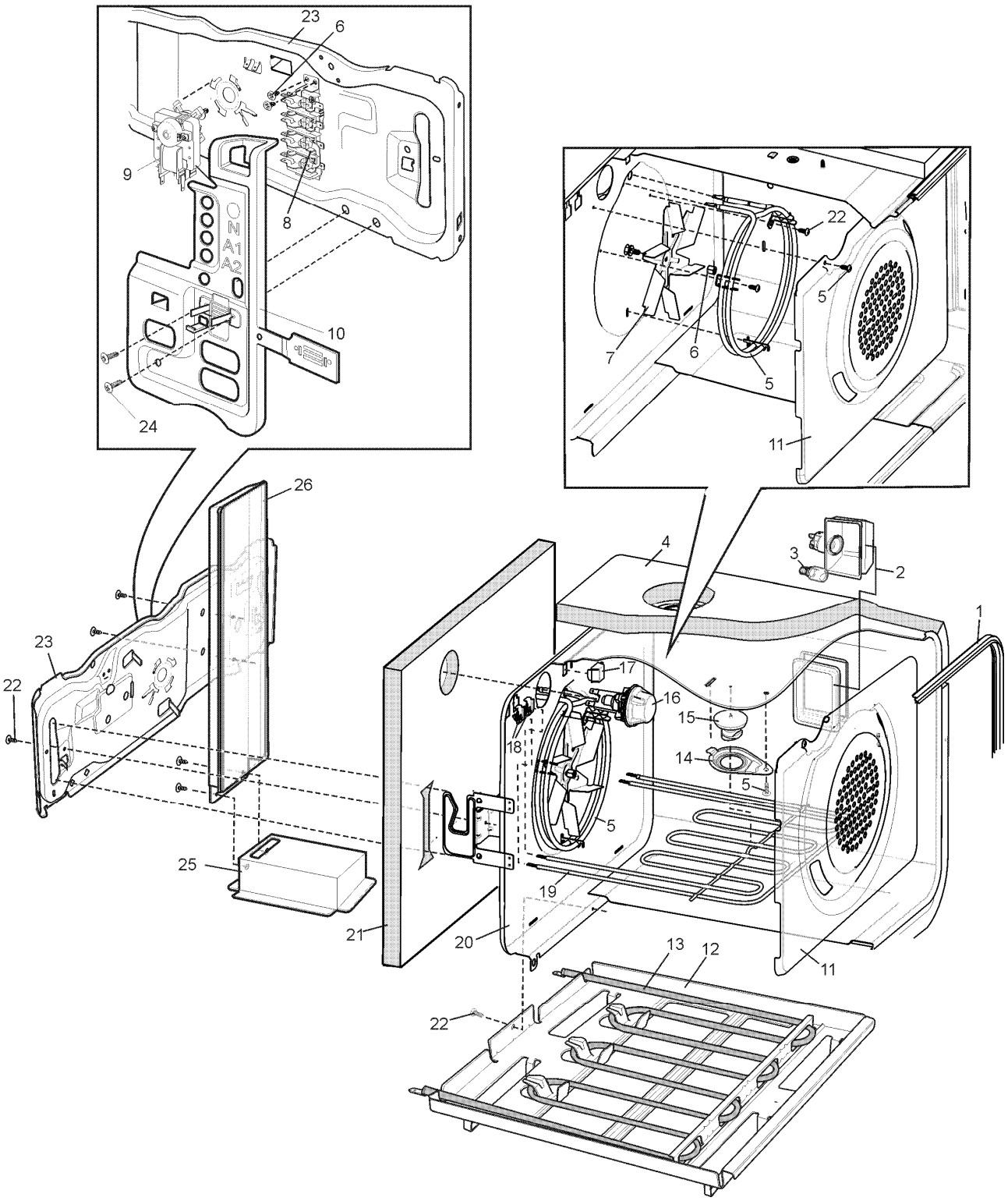

MODELS: PDP794S PDP794W

EX. VIEW DRAWING 5776
LOWER OVEN ASSEMBLY

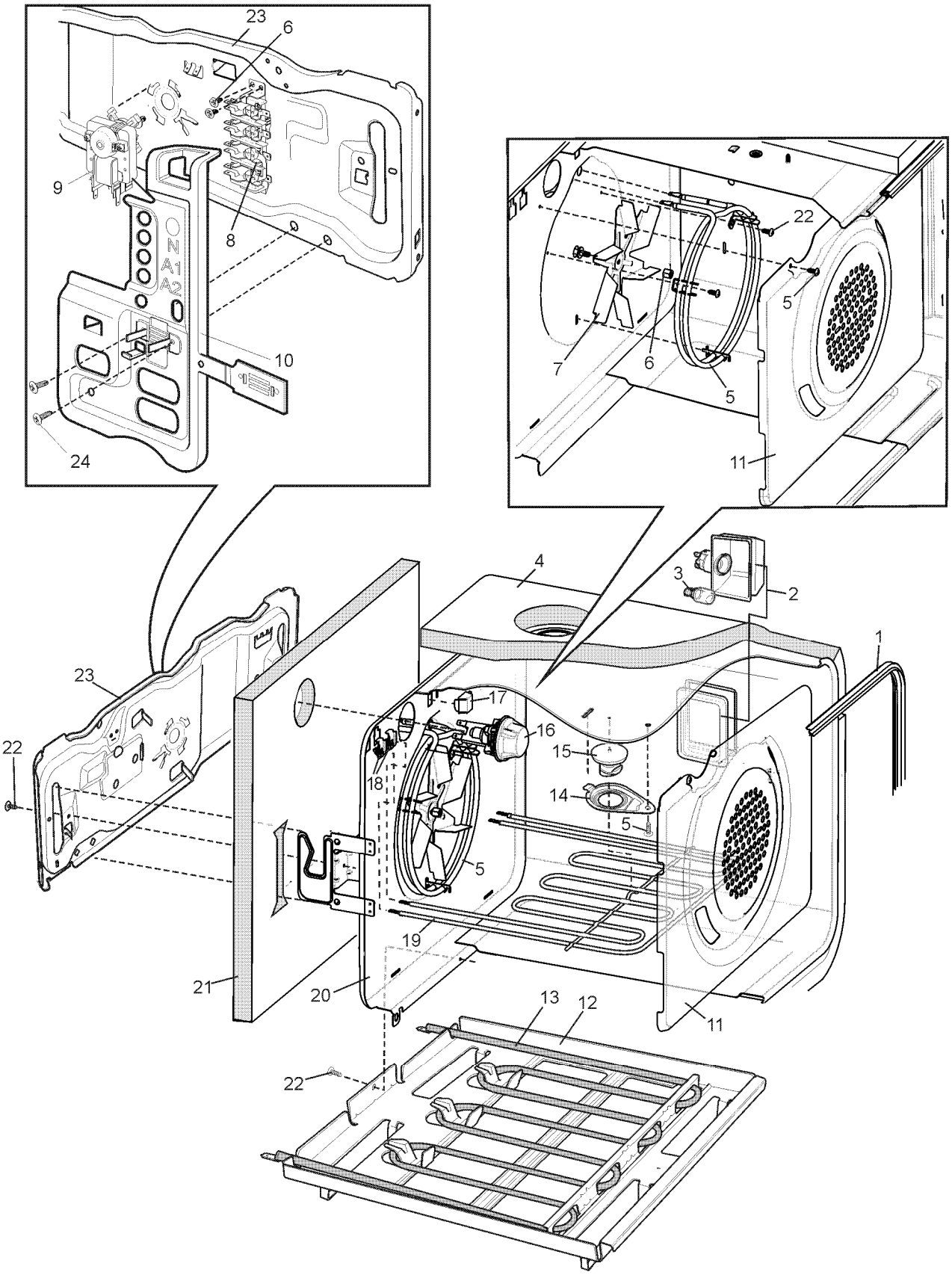

MODELS: PDP794S PDP794W

EX. VIEW DRAWING 5775
FRONT FRAME ASSEMBLY

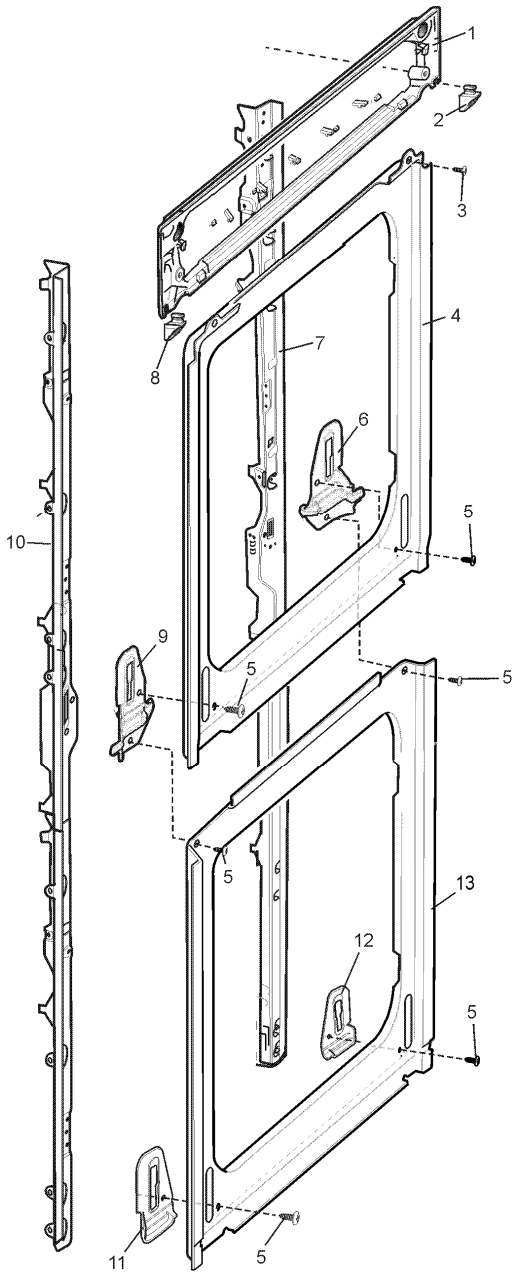

MODELS: PDP794S PDP794W

EX. VIEW DRAWING 5751
CHASSIS ASSEMBLY

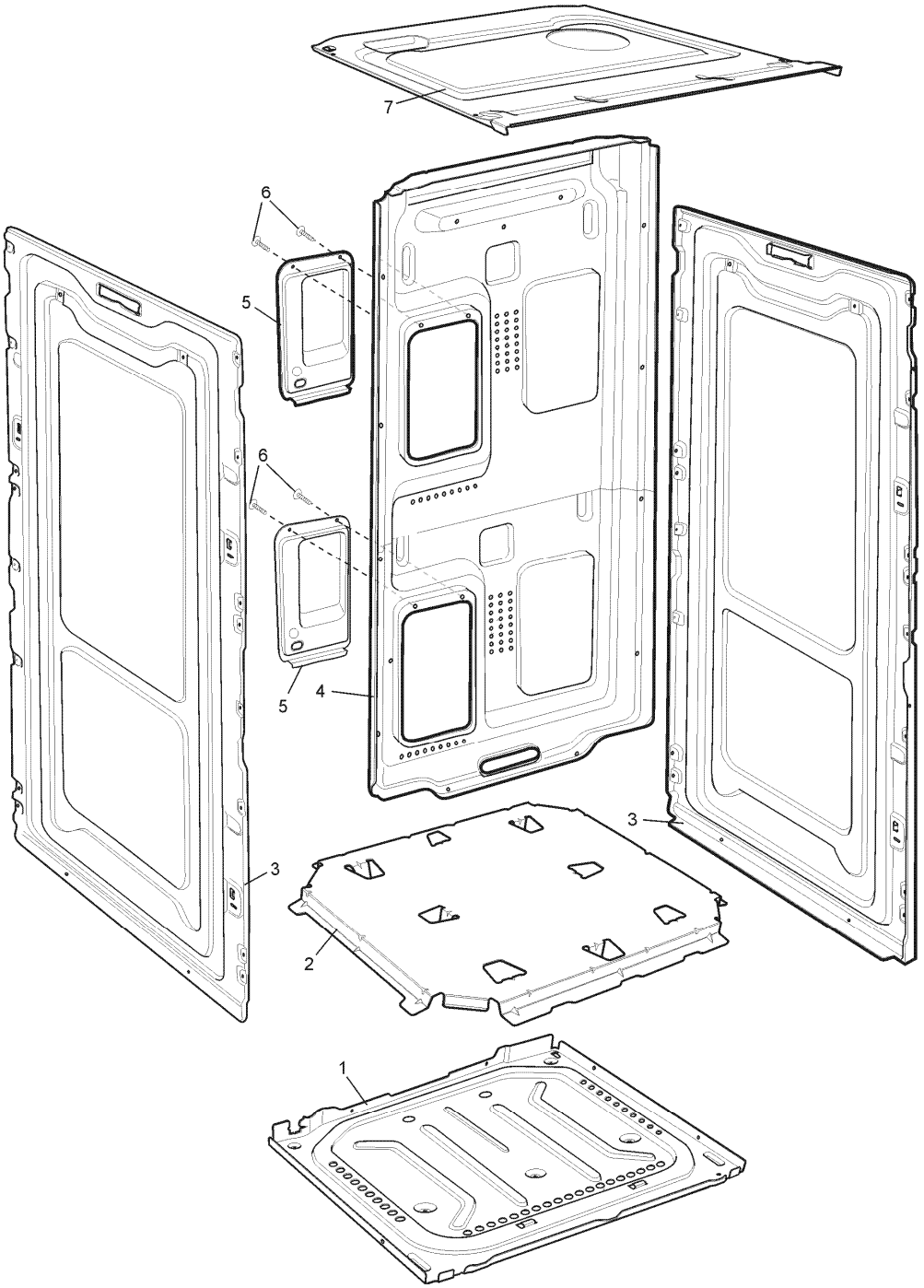

MODELS: PDP794S PDP794W

EX. VIEW DRAWING 5470
PANEL DECK ASSEMBLY

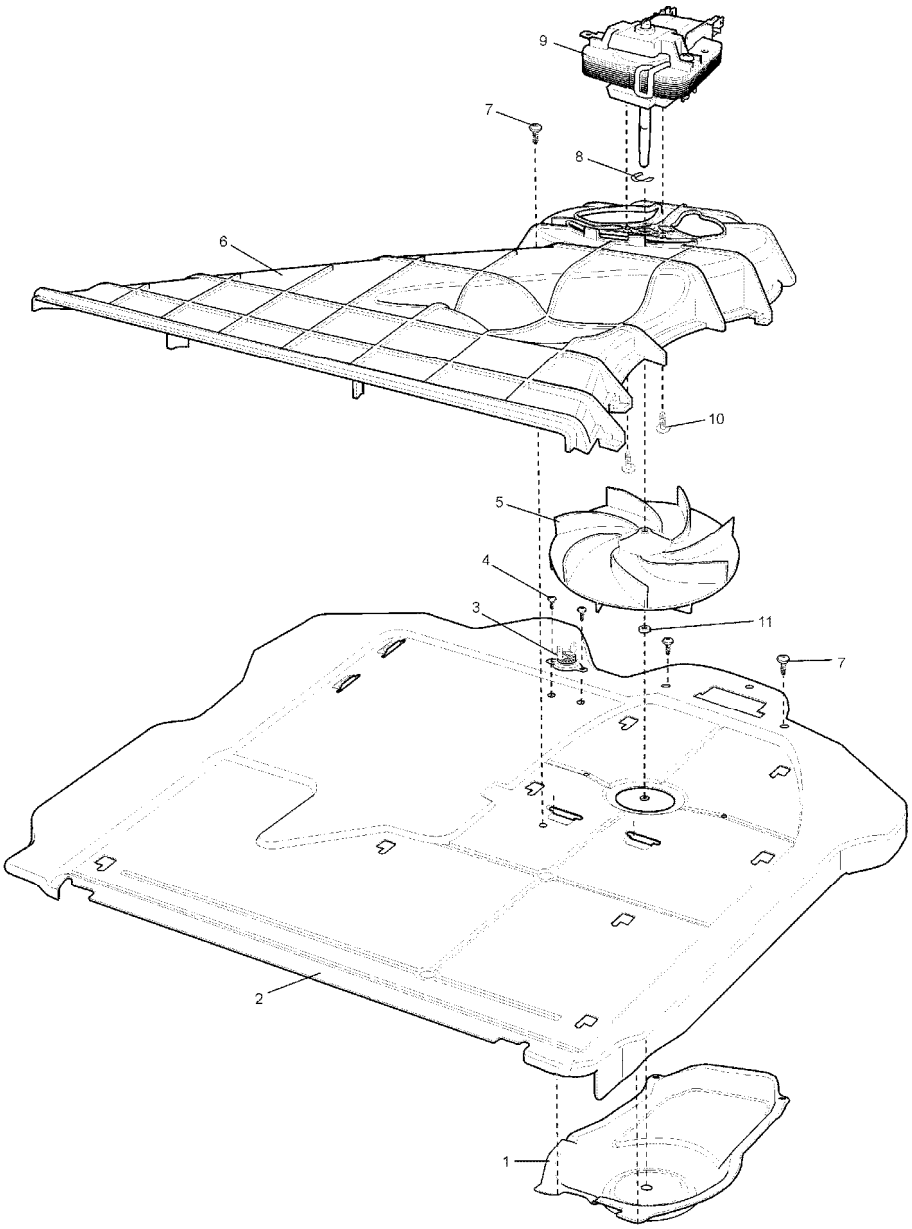

MODELS: PDP794S PDP794W

EX. VIEW DRAWING 6601
CONTROL PANEL ASSEMBLY

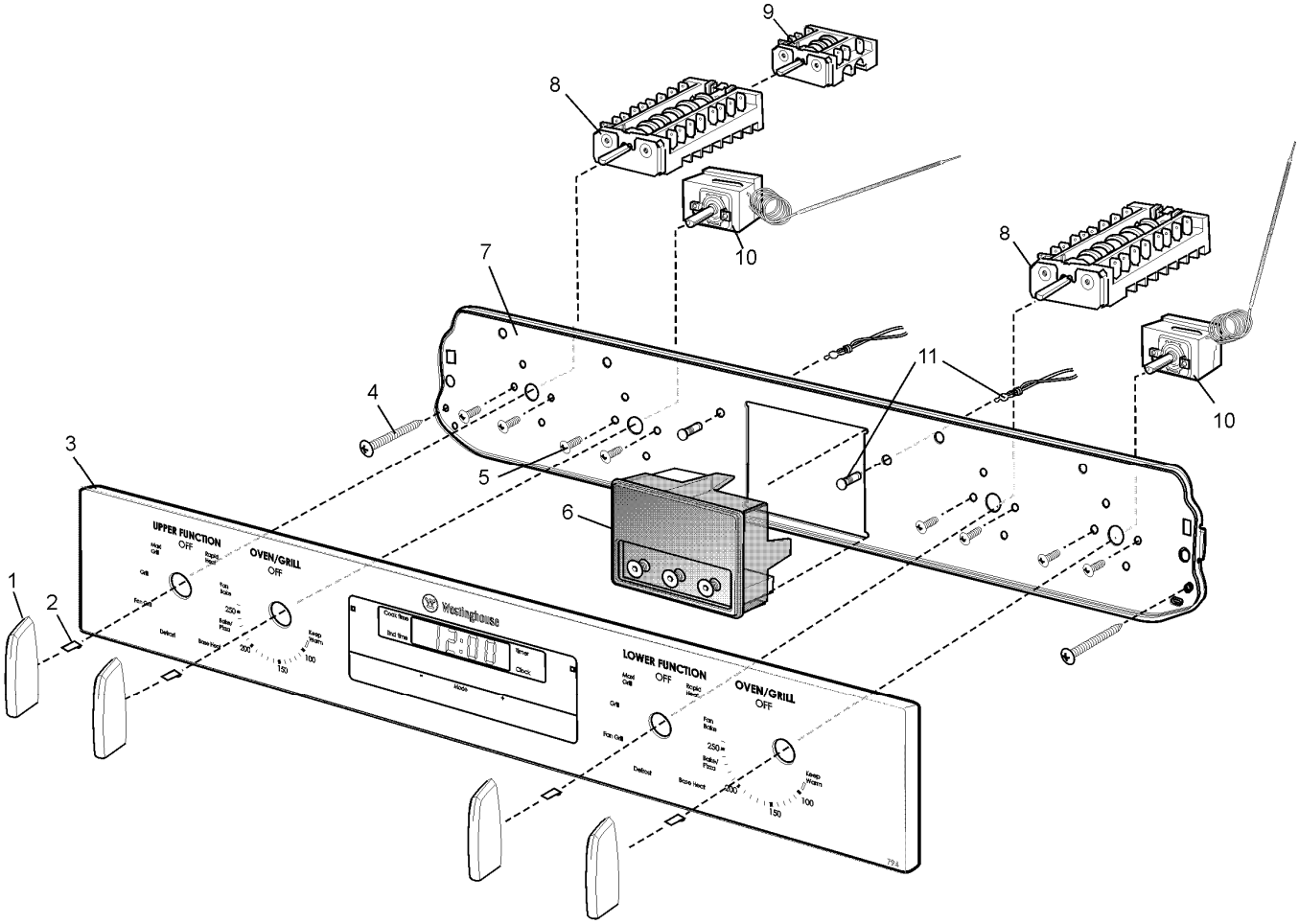

MODELS: PDP794S PDP794W

EX. VIEW DRAWING 6592
OVEN DOOR ASSEMBLY

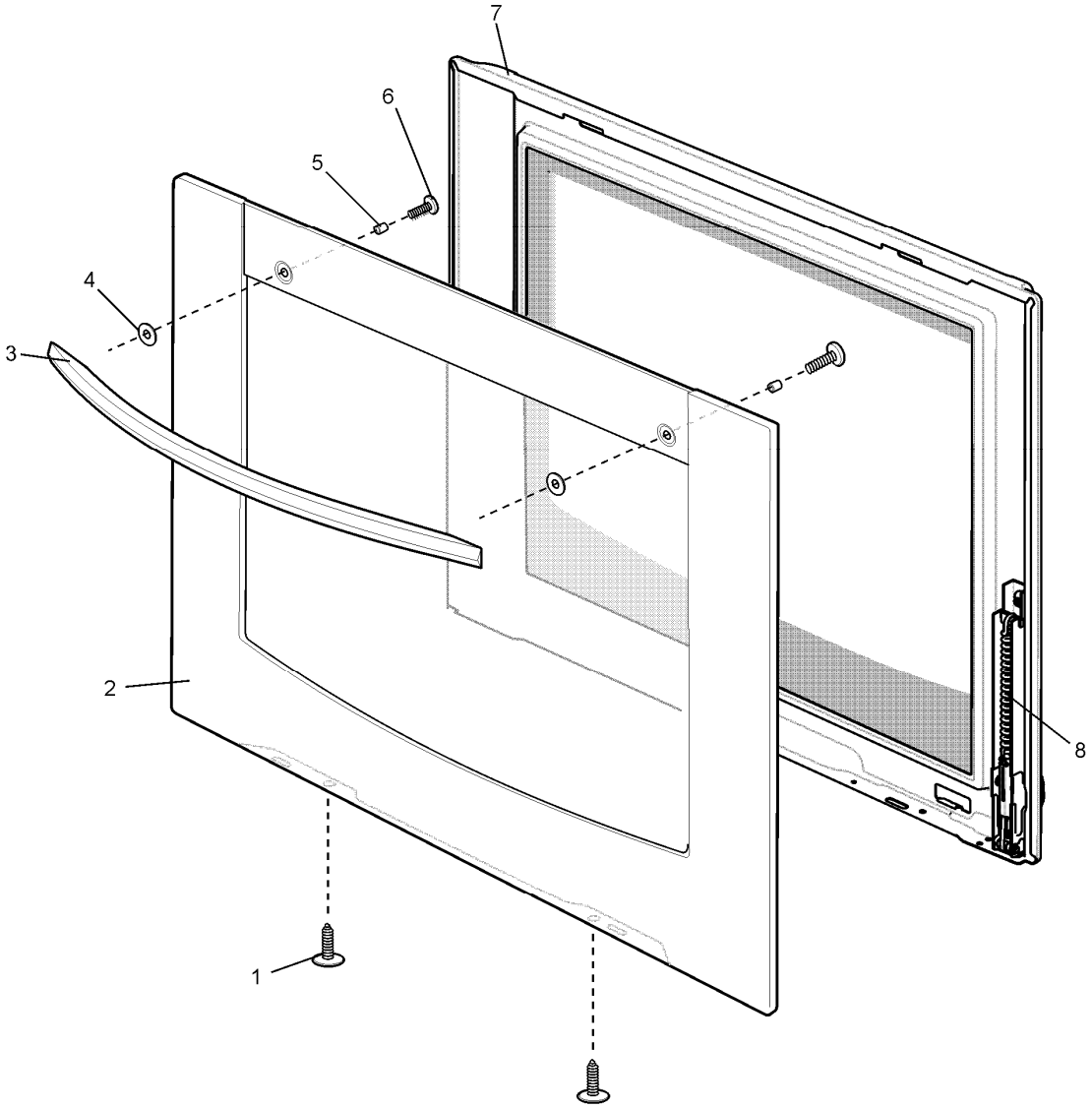

0263 010 445

MODELS: PDP794S PDP794W
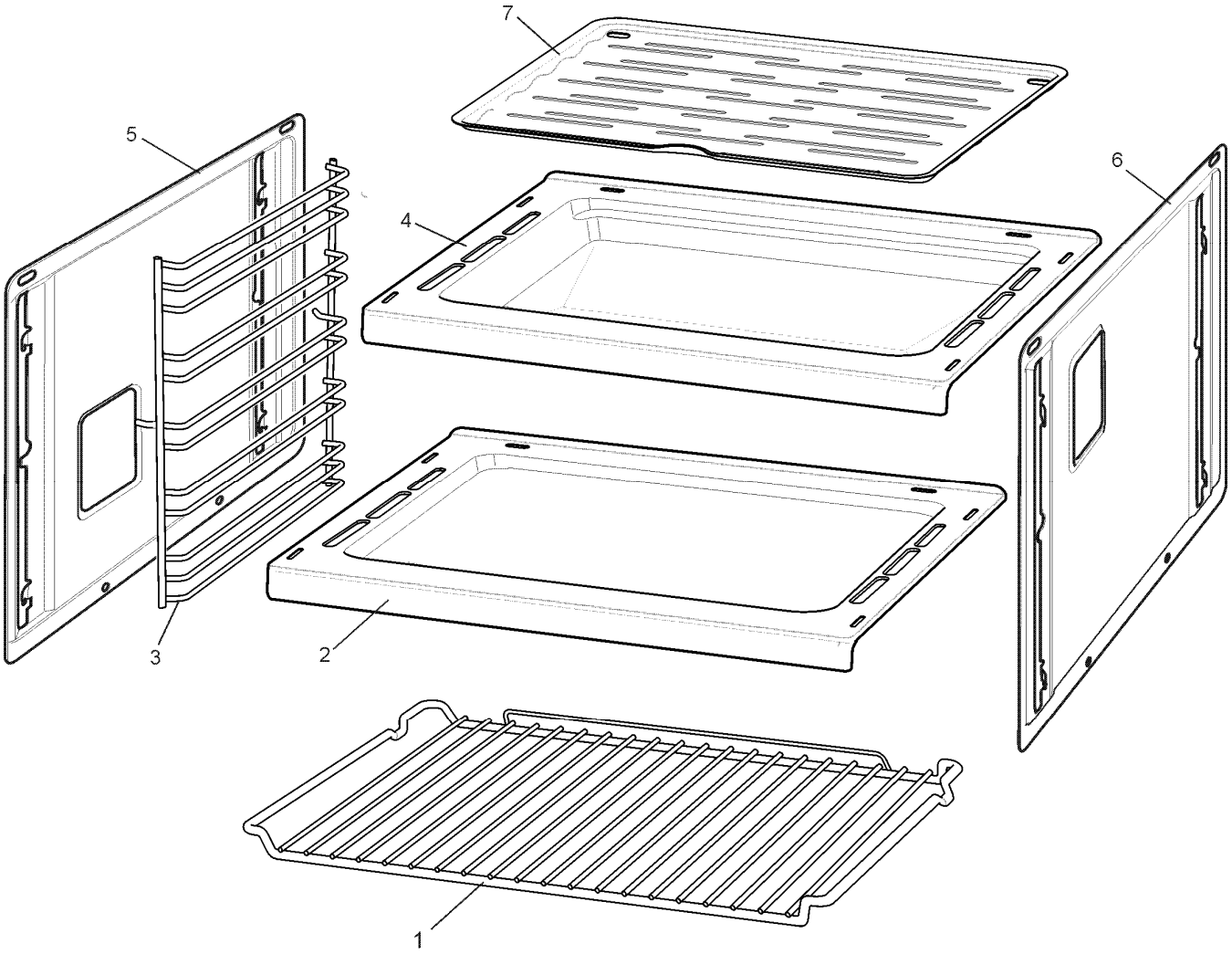
EX. VIEW DRAWING 5749
INTERNAL PACK